MODEL

Oasis Midnight PLUS cover

Version française à la page 3.

PURPOSE OF THIS ADDENDUM

This addendum is intended to replace the *Lifting Mechanism installation (part 2)* section of the Owner's manual for the Oasis PLUS cover.

⚠ CAUTION

- Keep in mind that the screws may break or strip if the torque is too much when using power tools.
- Follow the installation patterns shown in images 1 and 2 when installing the outer corner brackets.
- The short side of the corner bracket must be orientated towards the shorter side of the cover (image 3).
- When fastening in the screws, push the post towards the cover for a better fit of the corner bracket.

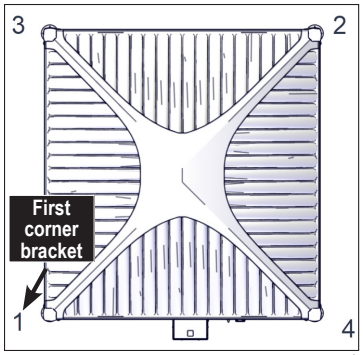

IMAGE 1

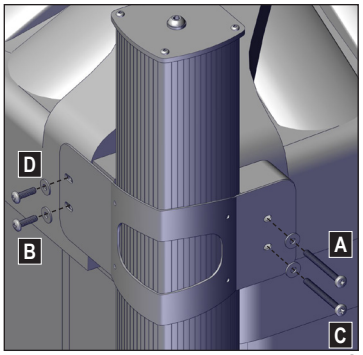

IMAGE 2

NOTE

A 1/8" drill bit is required to drill pilot holes in the spacers.

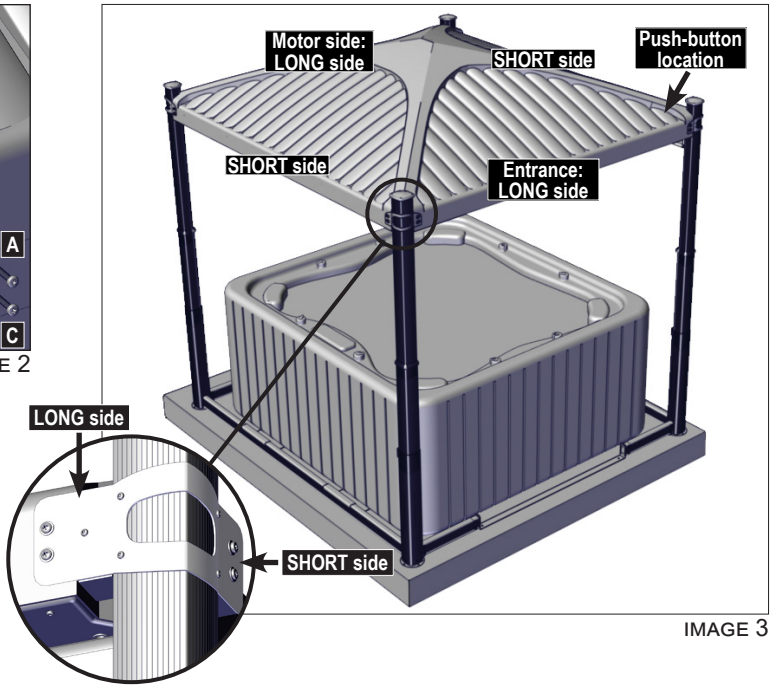

IMAGE 3

LIFTING MECHANISM INSTALLATION (PART 2)

1) Make sure the cover is centered. Use a measuring tape on all four sides and make sure it is still resting on the foam spacers. If not, center the cover on all four sides.

2) Check if the posts are vertically leveled with a 36" long level. Check the front and side of each post with the level.

3) **Entrance side and motor side:**

Place a spacer behind the corner bracket. Fasten the bracket and the spacer to the cover with two painted M6 x **60 mm** screws and 1/4" painted washers, following the A to D pattern shown in image 2.

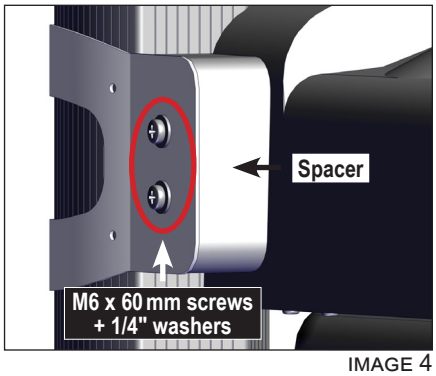

IMAGE 4

Sides:

Slide a spacer between the sleeve and the cover. Fasten the bracket to the cover with two painted M6 x **20 mm** screws and 1/4" painted washers, following the A to D pattern shown in image 2.

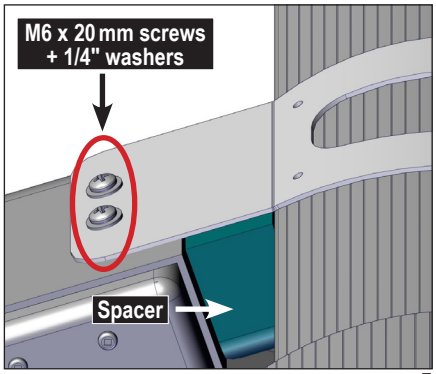

IMAGE 5

261047

ADDENDUM

⚠ WARNING

Make sure the sleeve is correctly pressed against the outer shell before installing the M6 screws.

4) Fasten the corner bracket to the sleeve with four no. 8 x 1/2" self-tapping screws following the A to D pattern shown at right.

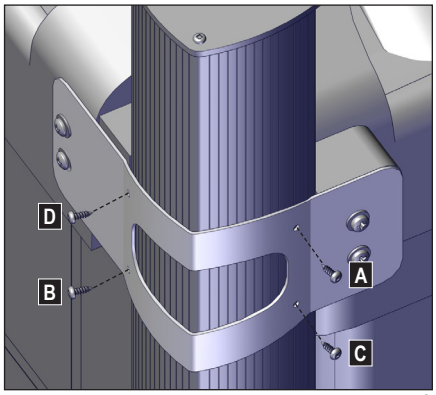

IMAGE 6

NOTE

We recommend drilling a 1/8" pilot hole before screwing the self-tapping screw.

5) Screw a no. 8 x 1/2" self-tapping screw through the center of the bracket and into the spacer.

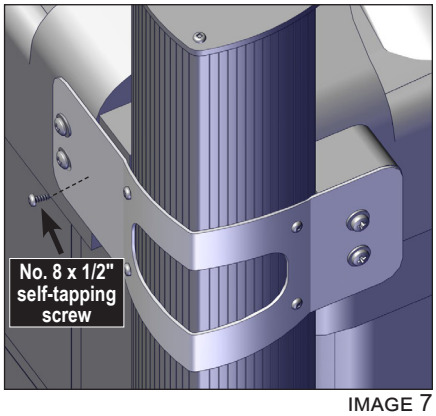

IMAGE 7

⚠ WARNING

Make sure there is no gap between the sleeve and the bracket (image 8). If there is a gap, review the previous steps.

It is very difficult to reposition the sleeves once they have been screwed in. We highly recommend checking whether the posts are level before screwing in the corner bracket.

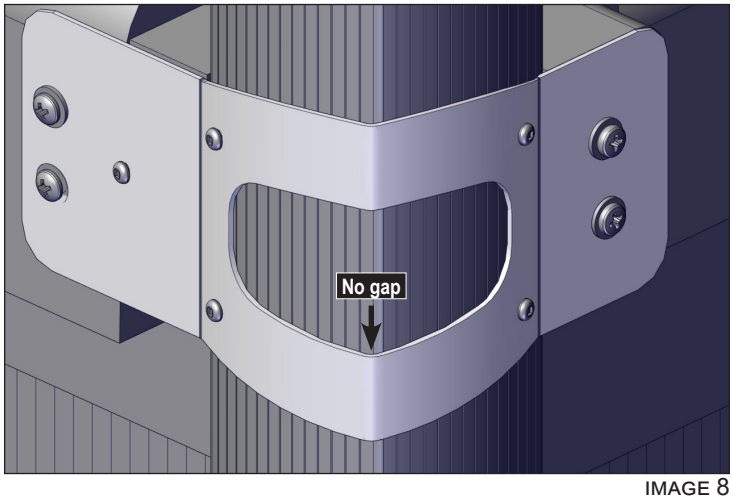

IMAGE 8

6) Repeat steps 3 to 5 for each corner following the same patterns shown in images 1 and 2.

7) Check the installation of the brackets by trying to lift each sleeve. Review the previous steps for any broken screws or to retighten screws if the sleeve keeps moving (image 9).

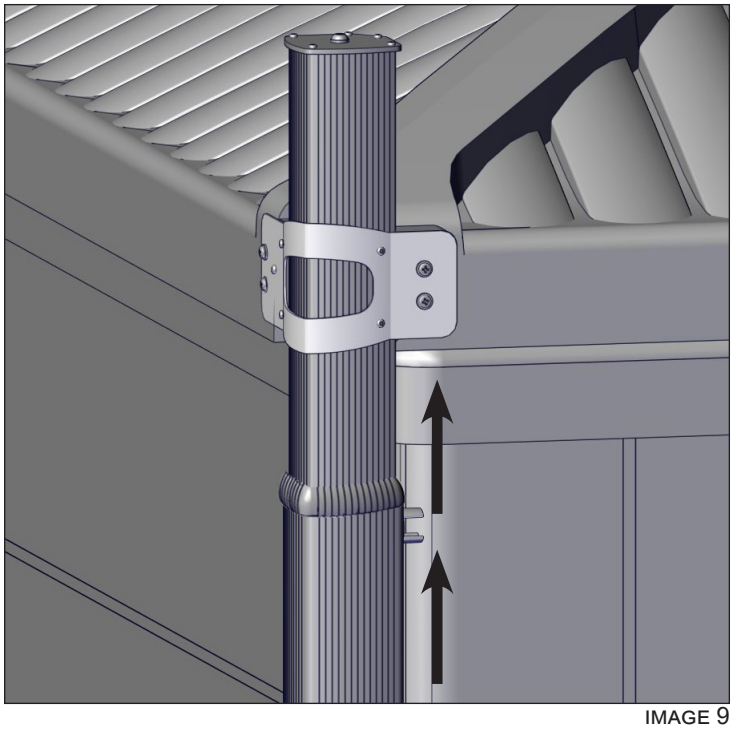

IMAGE 9

8) Install the rubber caps on each post (image 10).

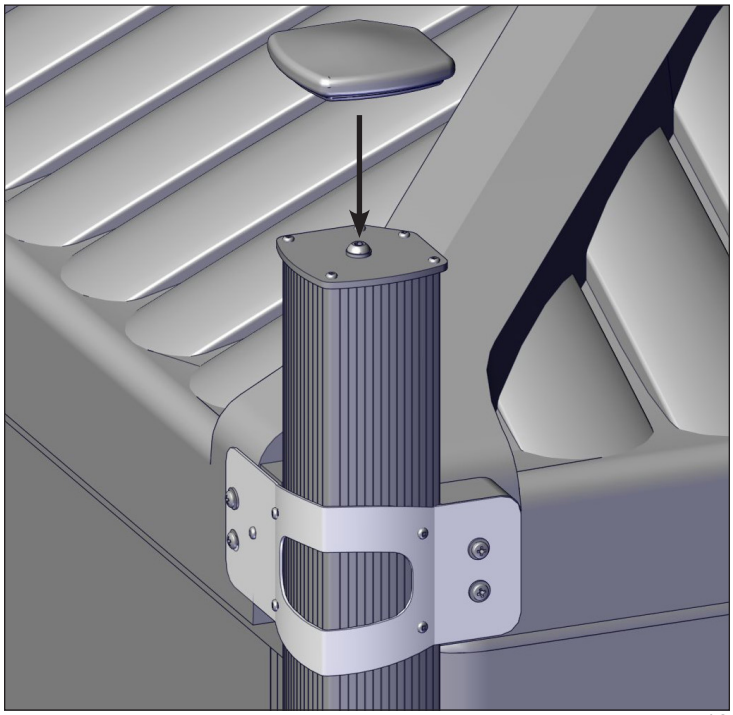

IMAGE 10